Schematic for the NCP5007 Demonstration Board

ON Semiconductor®
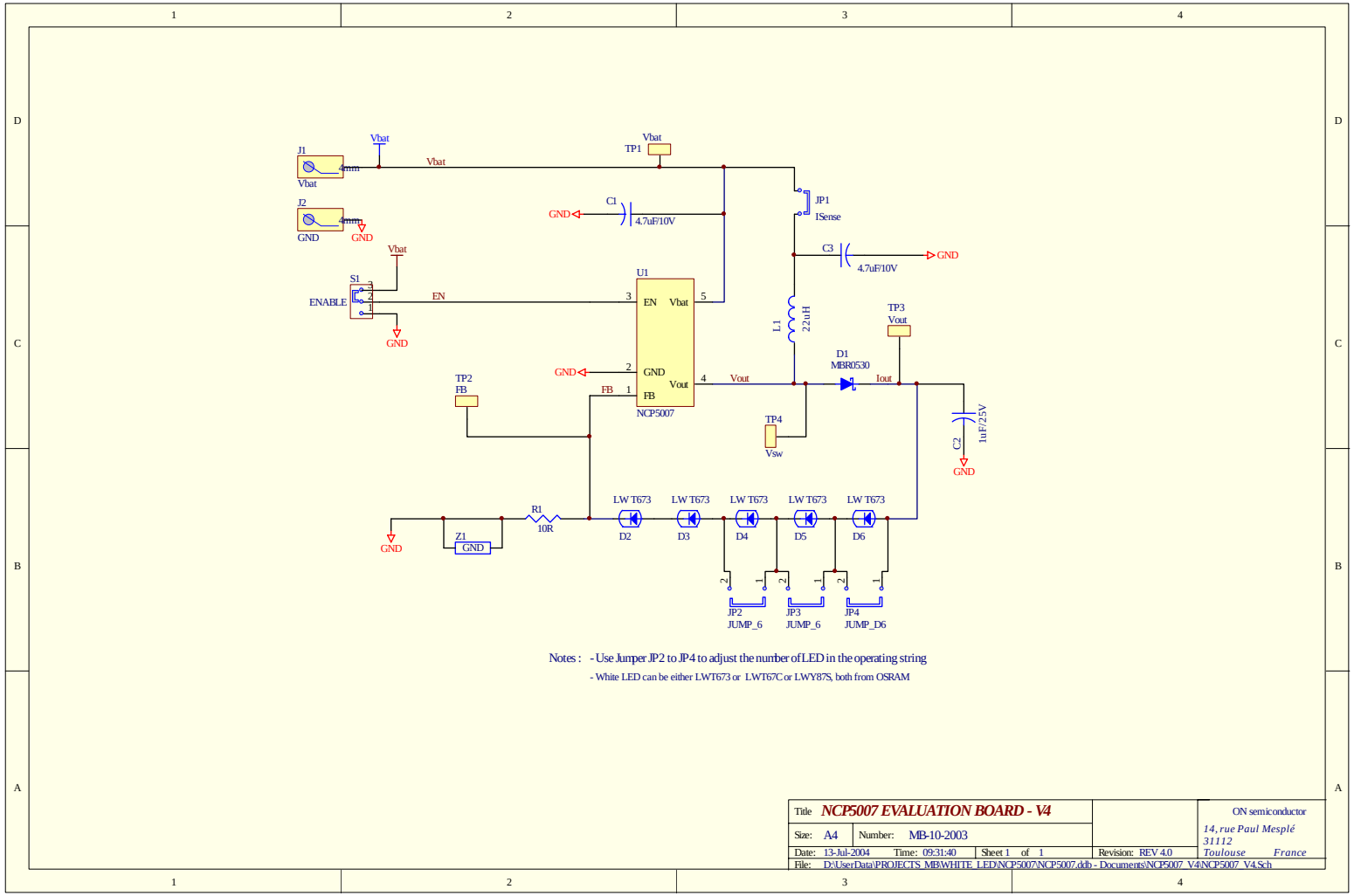
7/13/2004