SMA

DIMENSIONS in inches (millimeters)

DO-214AC (SMA)

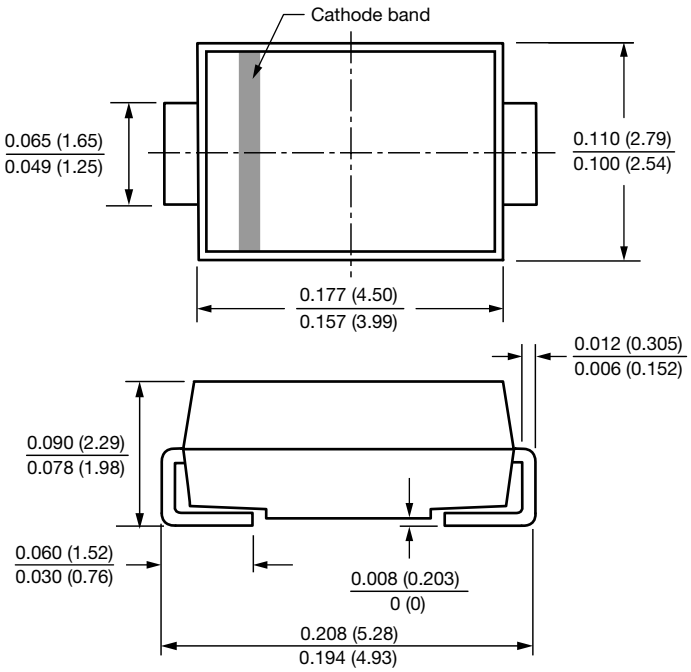
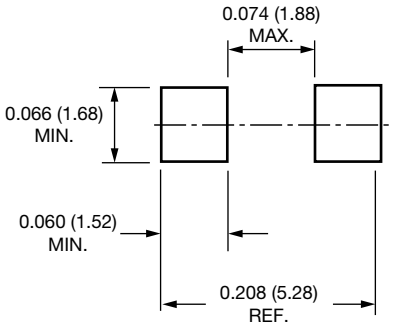
Mounting Pad Layout